HYDROMA HYDRAULICKÉ SYSTÉMY

HIDROMA SISTEMS UKŁADY HYDRAULICZNE

HYDROMA ГИДРАВЛИЧЕСКИЕ СИСТЕМЫ

Part number:

RevNo	Revision note	Date	Signature	Checked

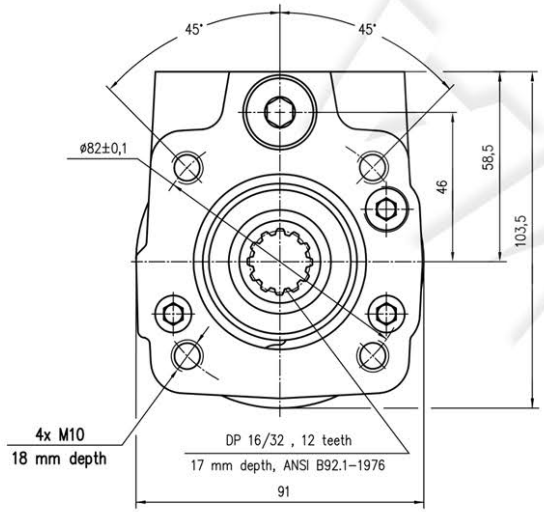

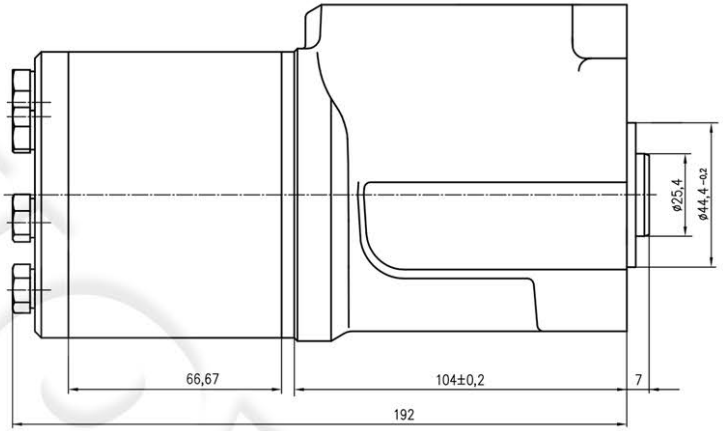

Hydraulic SCHEMATIC

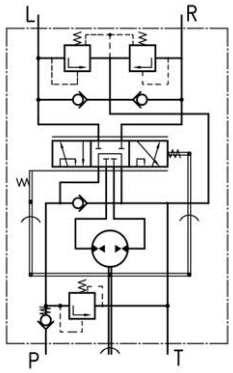

K – K

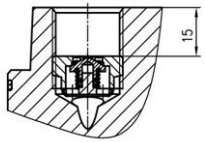

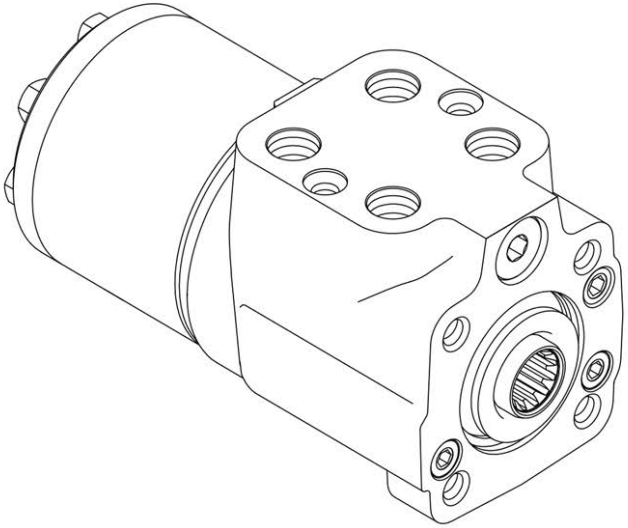

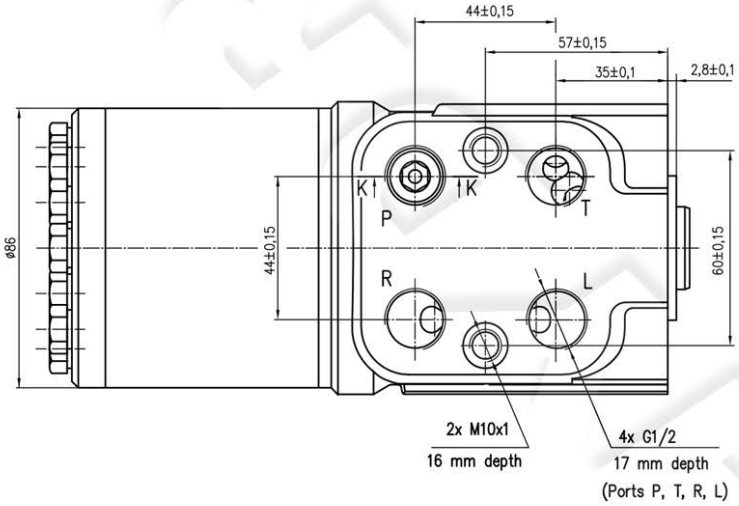

1. Technical DATA

1.1 Displacement,	–	495	cm^3/rev
1.2 Rated Flow,	–	50	lpm
1.3 Rated Pressure,	–	180	bar
1.4 Relief Valve Pressure Settings,	–	180	bar
1.5 Shock Valve Pressure Settings,	–	240	bar
1.6 Max. Continuous Pressure in Line T,	–	25	bar
1.7 Max. Torque at Servoamplifing,	–	3	Nm
1.8 Max. Torque w/o Servoamplifing,	–	120	Nm
1.9 Weight,	–	8,0	kg

2. Features:

2.1 Open Center – Non Load Reaction.
2.2 Inlet Check Valve.
2.3 Inlet Relief Valve.
2.4 Cylinder Port Shock Valves.
2.5 Anti-Cavitation Valves for Cylinder Ports.

3. Technical REQUIREMENTS

3.1 Painted with black Alkyd-styrenated enamel – RAL9005.

FOR APPROVAL

APPROVED BY .....

DATE .....

Itemref	Quantity	Title/Name, designation, material, dimension etc		Article No./Reference
Material	Weight	Designed by Hristov	Date 28.04.2016	Scale 1:1
		Hydrostatic Steering Unit HKUS 500/4–180P	Rev. 0	Sheet 1/1

www.hidromasistems.pl

www.hydroma.eu

www.hydroma.cz